CARACTERÍSTICAS DIMENSIONAIS

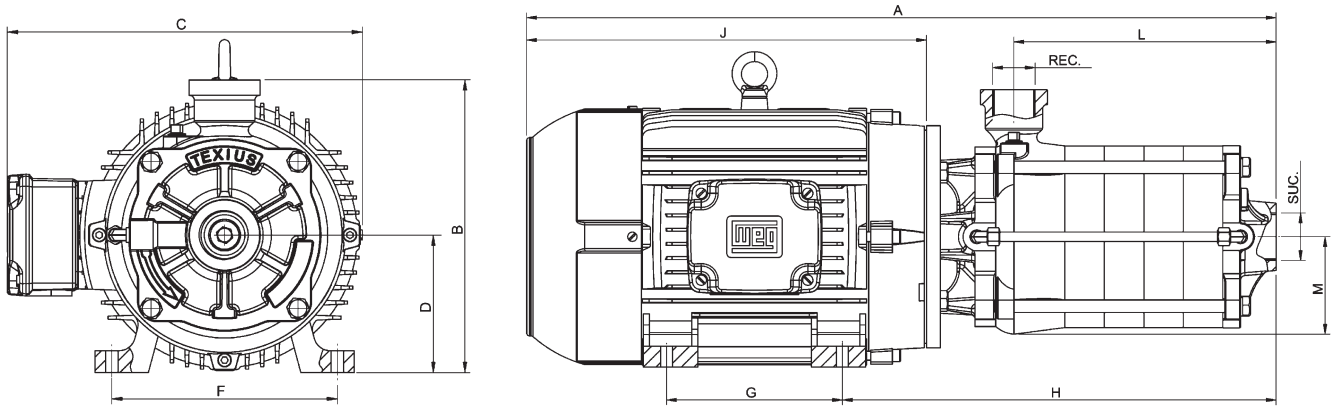

Características Dimensionais TBHMU

CARACTERISTICAS DIMENSIONAIS (mm)													
Série	Modelo	Suc.	Rec.	A	B	C	D	F	G	H	J	L	M
TBHMU	**TBHMU-1,5**	1"	3/4"	423	206	215	80	125	100	231	236	100	87
	TBHMU-2	1"	3/4"	423	206	215	80	125	100	231	236	100	87
	TBHMU-3	1"	3/4"	492	206	242	90	140	100	269	256	134	87
	TBHMU-4	1"	3/4"	517	215	242	90	140	125	294	282	174	88
	TBHMU-5	1.1/2"	1.1/4"	565	249	262	100	160	140	307	316	106	98
	TBHMU-7,5-2	1.1/2"	1.1/4"	565	261	294	112	190	140	307	332	106	98
	TBHMU-7,5-3	1.1/2"	1.1/4"	565	261	294	112	190	140	347	332	146	98
	TBHMU-7,5-4	1.1/2"	1.1/4"	565	261	294	112	190	140	387	332	186	98
	TBHMU-10-3	1.1/2"	1.1/4"	565	281	340	132	216	140	347	373	146	98
	TBHMU-10-4	1.1/2"	1.1/4"	565	281	340	132	216	140	387	373	186	98
	TBHMU-10-5	1.1/2"	1.1/4"	565	281	340	132	216	140	427	373	226	98
	TBHMU-15-5	1.1/2"	1.1/4"	565	281	340	132	216	178	427	408	226	98
	TBHMU-10-6	1.1/2"	1.1/4"	565	281	340	132	216	178	467	408	266	98

Texius Máquinas e Equipamentos Eletromecânicos Ltda
José Lutzemberger, 210 • B. Anchieta • Porto Alegre/RS • Fone +55 51 3371-7700 • vendas@texius.com.br